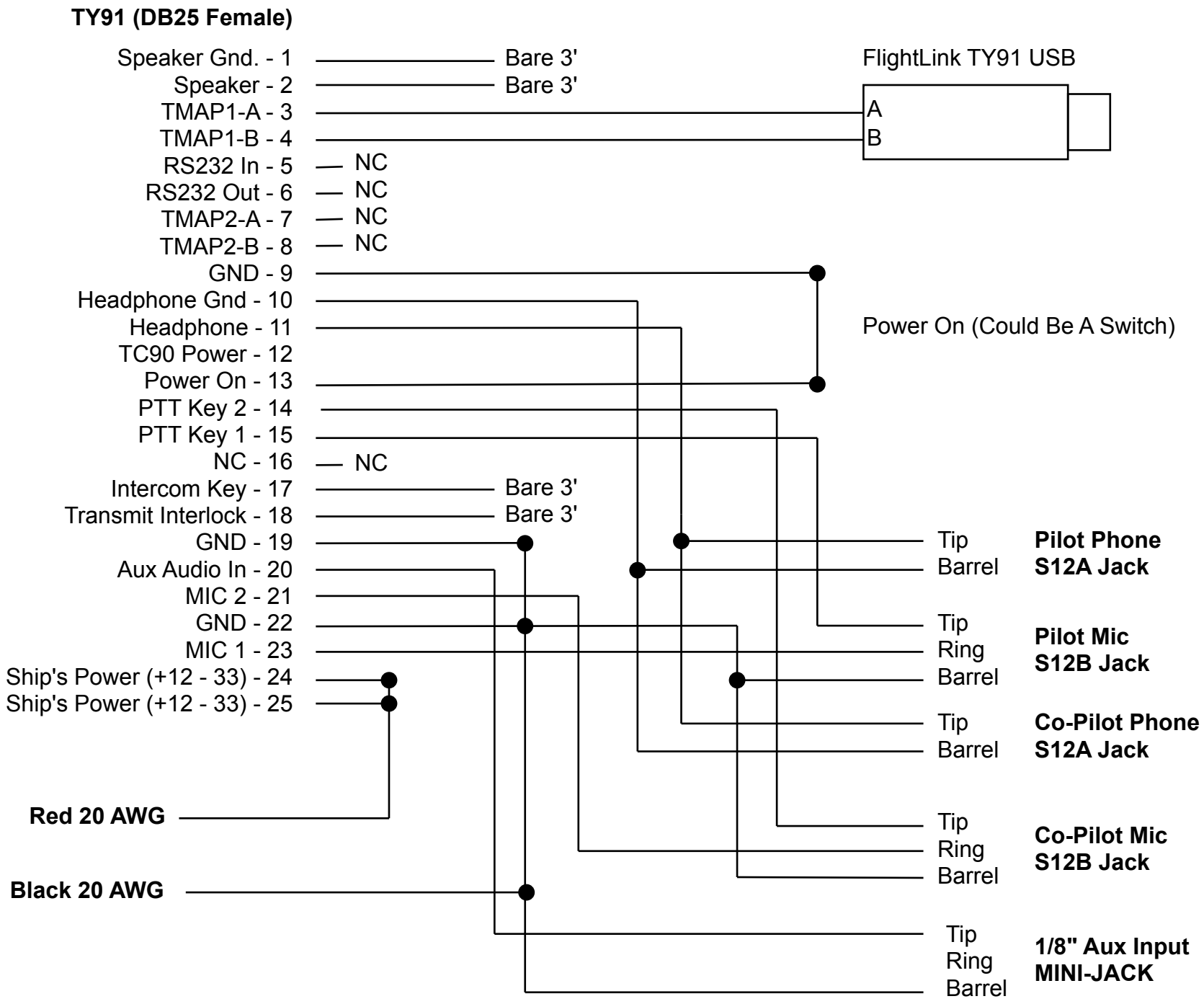
TY91 (DB25 Female)
Speaker Gnd. - 1
Speaker - 2
TMAP1-A - 3
TMAP1-B - 4
RS232 In - 5
RS232 Out - 6
TMAP2-A - 7
TMAP2-B - 8
GND - 9
Headphone Gnd - 10
Headphone - 11
TC90 Power - 12
Power On - 13
PTT Key 2 - 14
PTT Key 1 - 15
NC - 16
Intercom Key - 17
Transmit Interlock - 18
GND - 19
Aux Audio In - 20
MIC 2 - 21
GND - 22
MIC 1 - 23
Ship's Power (+12 - 33) - 24
Ship's Power (+12 - 33) - 25
Bare 3'
Bare 3'
NC
NC
NC
NC
NC
Bare 3'
Bare 3'
FlightLink TY91 USB
A
B
Power On (Could Be A Switch)
Tip
Barrel
Pilot Phone
S12A Jack
Tip
Ring
Barrel
Pilot Mic
S12B Jack
Tip
Barrel
Co-Pilot Phone
S12A Jack
Tip
Ring
Barrel
Co-Pilot Mic
S12B Jack
Tip
Ring
Barrel
1/8" Aux Input
MINI-JACK
Red 20 AWG
Black 20 AWG